brush grommet

A premium brush strip grommet for installation in an industry standard 80mm desk top aperture.

Moulded in high strength fire retardant polycarbonate with attractive satin silver painted top surface, the OE Brush Grommet is held securely in place by the hand tightened locking nut.

The 53mm diameter high density nylon brush strip ring prevents dirt and dust ingress whilst neatly managing single or multiple power and data cables.

USPs

- Industry standard 80mm fit
- Locking nut for secure fixing
- High strength Polycarbonate
- Satin silver finish
- High density brush ring

brush grommet TECHNICAL

Dimensions

Brush Grommet with locking nut.

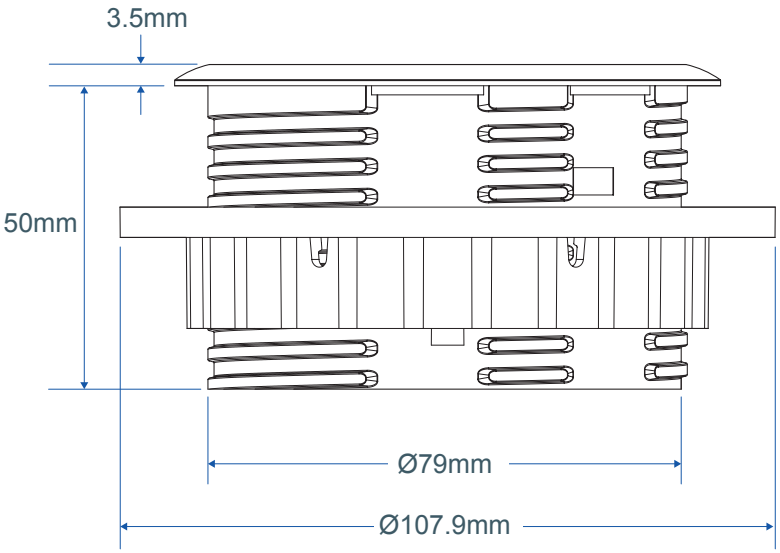

Brush grommet without locking nut.

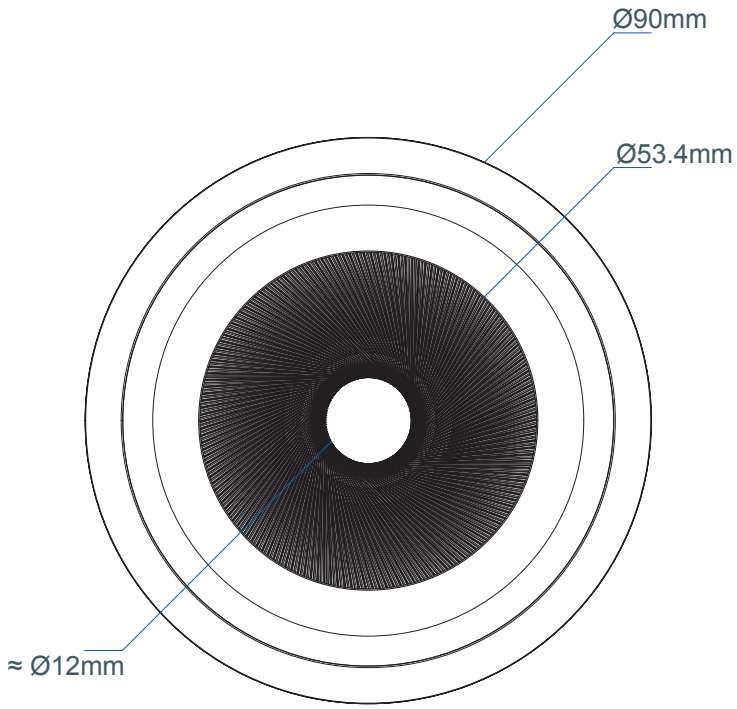

Features

Configuration
Ø53mm brush strip ring with Ø10mm central aperture, mounted in a polycarbonate grommet with locking nut.

Construction
Grommet and securing nut – Fire retardant polycarbonate
Brush strip ring – High density 0.15mm nylon brush strands in galvanised steel frame.

Colours
Brush strip ring: Black
Grommet/bezel top surface: Satin Silver

Installation
The OE Brush Grommet fits into an industry standard Ø80mm cut-out. If your surface does not already have a cut-out, we can provide a hole saw attachment. Once in place the Brush Grommet can then be secured using the locking nut, which can then be fixed in place using screws if required.

The OE Brush Grommet is suitable for surfaces 1mm - 40mm thick.

Certifications
Not required

Low profile design